Technical Data Sheet
Electric Motor 1 phase in Aluminum IE1

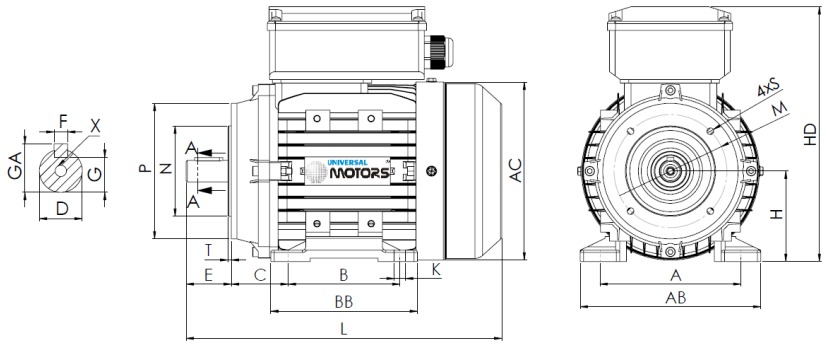

L (standard motor)
250

L (motor w/brake)
NA

L (motor w/forced ventilation)
349

L (motor without ventilation)
218

Feet					Shaft						Carcass				Flange				
H	A	B	C	K	D	E	F	G	GA	X	AB	BB	AC	HD	M	N	P	S	T
71	112	90	45	7	14j6	30	5	11	16	M5x12	135	110	139	198	85	70	105	M6	2.5

Electrical Data

Type	UPC 71K-4	
Poles	4/1500	Poles
Power	0.25	Kw
Voltage	230	V
Frequency	50	Hz
Speed	1400	rpm
Nominal current	1.92	A
Power factor	0.92	
Efficiency 100%	61.5	%
Efficiency 75%	-	%
Efficiency 50%	-	%
Torque	1.71	N.m
Ta/Tn	0.35	
Ia/In	3.4	
Tm/Tn	1.7	

Mechanical Data

Shaft height	71	
Construction form	B34	
Mechanical protection	55	
Heating class	B	
Insulation class	F	
Service	S3-70%	
Ambient temp.	-10ºC-40ºC	
Altitude	1000	
Noise	-	dB(A)
Weight	5.5	kg
Bearing DE	6202 2Z C3	
Bearing NDE	6202 2Z C3	

Extra Data

Applicable brakes

DC brake	NA	Brake torque	NA	N.m
AC brake	NA	Brake torque	NA	N.m

Applicable forced ventilations

Single-phase forced ventilation	Power	35	W
Three-phase forced ventilation	Power	NA	W