Technical Data Sheet
Electric Motor Three phase in Aluminum IE2

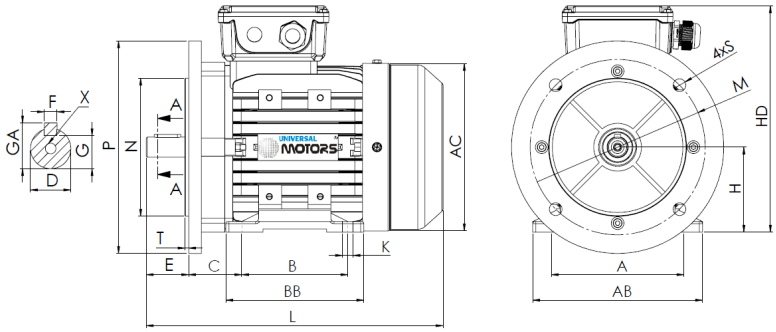

L (standard motor)
278

L (motor w/brake)
345

L (motor w/forced ventilation)
390

L (motor without ventilation)
247

Feet					Shaft						Carcass				Flange				
H	A	B	C	K	D	E	F	G	GA	X	AB	BB	AC	HD	M	N	P	S	T
80	125	100	50	10	19j6	40	6	15.5	21.5	M6x16	160	130	165	217	165	130	200	12	3.5

Electrical Data

Type	HE31/UMHA* 80M2-6	
Poles	6/1000	Poles
Power	0.55	Kw
Voltage	400	V
Frequency	50	Hz
Speed	890	rpm
Nominal current	1.50	A
Power factor	0.72	
Efficiency 100%	73.1	%
Efficiency 75%	73.7	%
Efficiency 50%	70.1	%
Torque	5.9	N.m
Ta/Tn	2	
Ia/In	4.5	
Tm/Tn	2.1	

Mechanical Data

Shaft height	80	
Construction form	B35	
Mechanical protection	55	
Heating class	B	
Insulation class	F	
Service	S1	
Ambient temp.	-10ºC-40ºC	
Altitude	1000	
Noise	5.9	dB(A)
Weight	63	kg
Bearing DE	6204 2Z C3	
Bearing NDE	6204 2Z C3	

Extra Data

Applicable brakes

DC brake	NA	Brake torque	NA	N.m
AC brake	NA	Brake torque	NA	N.m

Applicable forced ventilations

Single-phase forced ventilation	Power	45	W
Three-phase forced ventilation	Power	45	W