Technical Data Sheet
Electric Motor Three phase in Aluminum IE2

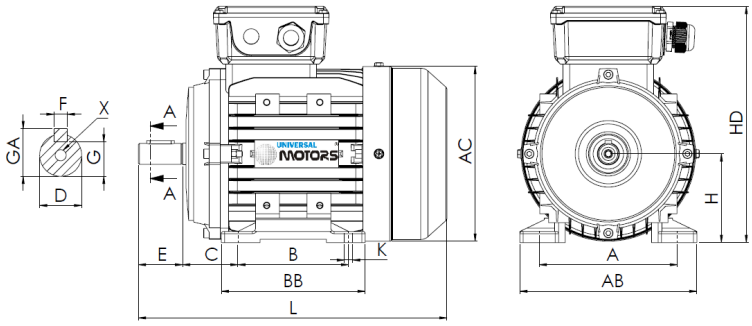

L (standard motor)
250

L (motor w/brake)
300

L (motor w/forced ventilation)
360

L (motor without ventilation)
208

Feet					Shaft						Carcass				Flange				
H	A	B	C	K	D	E	F	G	GA	X	AB	BB	AC	HD	M	N	P	S	T
71	112	90	45	7	14j6	30	5	11	16	M5x12	132	105	147	190	-	-	-	-	-

Electrical Data

Type	HE31/UMHA* 71M1-4	
Poles	4/1500	Poles
Power	0.25	Kw
Voltage	400	V
Frequency	50	Hz
Speed	1400	rpm
Nominal current	0.76	A
Power factor	0.70	
Efficiency 100%	68.5	%
Efficiency 75%	67.0	%
Efficiency 50%	60.8	%
Torque	1.71	N.m
Ta/Tn	2.4	
Ia/In	4.5	
Tm/Tn	2.4	

Mechanical Data

Shaft height	71	
Construction form	B3	
Mechanical protection	55	
Heating class	B	
Insulation class	F	
Service	S1	
Ambient temp.	-10ºC-40ºC	
Altitude	1000	
Noise	64	dB(A)
Weight	5.4	kg
Bearing DE	6202 2Z C3	
Bearing NDE	6202 2Z C3	

Extra Data

Applicable brakes

DC brake	REB-05-06	Brake torque	4	N.m
AC brake	AC2	Brake torque	10	N.m

Applicable forced ventilations

Single-phase forced ventilation	Power	35	W
Three-phase forced ventilation	Power	35	W