Technical Data Sheet
Electric Motor Three phase in Aluminum IE2

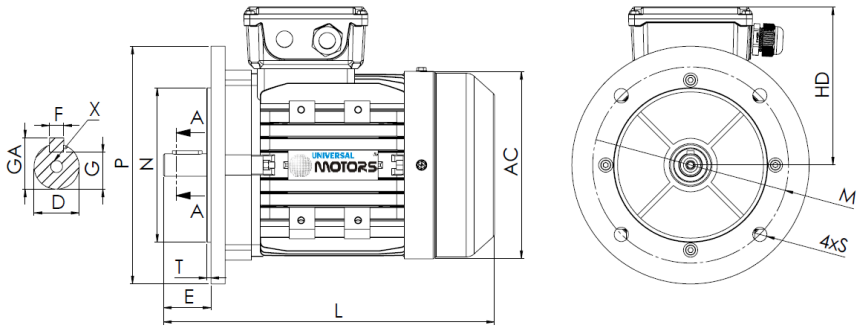

L (standard motor)
250

L (motor w/brake)
300

L (motor w/forced ventilation)
360

L (motor without ventilation)
208

Feet					Shaft						Carcass				Flange				
H	A	B	C	K	D	E	F	G	GA	X	AB	BB	AC	HD	M	N	P	S	T
-	-	-	-	-	14j6	30	5	11	16	M5x12	-	-	147	119	130	110	160	10	3.5

Electrical Data

Type	HE31/UMHA* 71M1-2	
Poles	2/3000	Poles
Power	0.37	Kw
Voltage	400	V
Frequency	50	Hz
Speed	2750	rpm
Nominal current	0.96	A
Power factor	0.79	
Efficiency 100%	69.5	%
Efficiency 75%	68.5	%
Efficiency 50%	63.9	%
Torque	1.28	N.m
Ta/Tn	2.3	
Ia/In	5.5	
Tm/Tn	2.3	

Mechanical Data

Shaft height	-	
Construction form	B5	
Mechanical protection	55	
Heating class	B	
Insulation class	F	
Service	S1	
Ambient temp.	-10ºC-40ºC	
Altitude	1000	
Noise	70	dB(A)
Weight	5.1	kg
Bearing DE	6202 2Z C3	
Bearing NDE	6202 2Z C3	

Extra Data

Applicable brakes

DC brake	REB-05-06	Brake torque	4	N.m
AC brake	AC2	Brake torque	10	N.m

Applicable forced ventilations

Single-phase forced ventilation	Power	35	W
Three-phase forced ventilation	Power	35	W