Technical Data Sheet
Electric Motor Three phase in Aluminum IE2

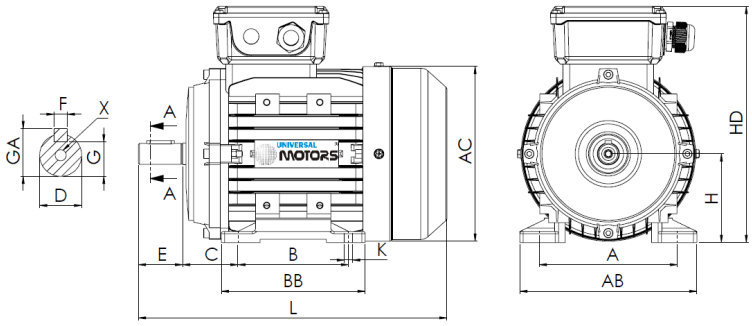

L (standard motor)
220

L (motor w/brake)
292

L (motor w/forced ventilation)
320

L (motor without ventilation)
185

Feet					Shaft						Carcass				Flange				
H	A	B	C	K	D	E	F	G	GA	X	AB	BB	AC	HD	M	N	P	S	T
63	100	80	40	7	11j6	23	4	8.5	12.5	M4x10	120	103	128	175	-	-	-	-	-

Electrical Data

Type	HE31/UMHA* 63M2-4	
Poles	4/1500	Poles
Power	0.18	Kw
Voltage	400	V
Frequency	50	Hz
Speed	1380	rpm
Nominal current	0.63	A
Power factor	0.62	
Efficiency 100%	64.7	%
Efficiency 75%	62.4	%
Efficiency 50%	55.6	%
Torque	1.25	N.m
Ta/Tn	2.4	
Ia/In	4.0	
Tm/Tn	2.4	

Mechanical Data

Shaft height	63	
Construction form	B3	
Mechanical protection	55	
Heating class	B	
Insulation class	F	
Service	S1	
Ambient temp.	-10ºC-40ºC	
Altitude	1000	
Noise	64	dB(A)
Weight	4.4	kg
Bearing DE	6201 2Z C3	
Bearing NDE	6201 2Z C3	

Extra Data

Applicable brakes

DC brake	REB-05-06	Brake torque	4	N.m
AC brake	AC1	Brake torque	4.5	N.m

Applicable forced ventilations

Single-phase forced ventilation	Power	25	W
Three-phase forced ventilation	Power	25	W