Technical Data Sheet
Electric Motor Three phase in Aluminum IE2

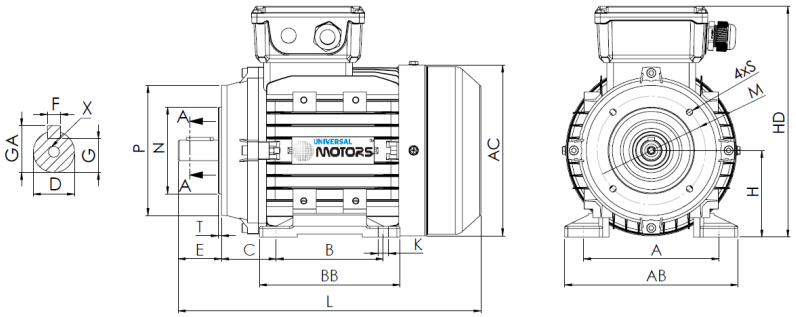

L (standard motor)
220

L (motor w/brake)
292

L (motor w/forced ventilation)
320

L (motor without ventilation)
185

Feet					Shaft						Carcass				Flange				
H	A	B	C	K	D	E	F	G	GA	X	AB	BB	AC	HD	M	N	P	S	T
63	100	80	40	7	11j6	23	4	8.5	12.5	M4x10	120	103	128	175	75	60	90	M5	2.5

Electrical Data

Type	HE31/UMHA* 63M1-2	
Poles	2/3000	Poles
Power	0.18	Kw
Voltage	400	V
Frequency	50	Hz
Speed	2750	rpm
Nominal current	0.61	A
Power factor	0.69	
Efficiency 100%	60.4	%
Efficiency 75%	57.6	%
Efficiency 50%	49.5	%
Torque	0.63	N.m
Ta/Tn	2.3	
Ia/In	4.0	
Tm/Tn	2.3	

Mechanical Data

Shaft height	63	
Construction form	B34	
Mechanical protection	55	
Heating class	B	
Insulation class	F	
Service	S1	
Ambient temp.	-10ºC-40ºC	
Altitude	1000	
Noise	66	dB(A)
Weight	3.7	kg
Bearing DE	6201 2Z C3	
Bearing NDE	6201 2Z C3	

Extra Data

Applicable brakes

DC brake	REB-05-06	Brake torque	4	N.m
AC brake	AC1	Brake torque	4.5	N.m

Applicable forced ventilations

Single-phase forced ventilation	Power	25	W
Three-phase forced ventilation	Power	25	W