Technical Data Sheet
Electric Motor Three phase in Aluminum IE2

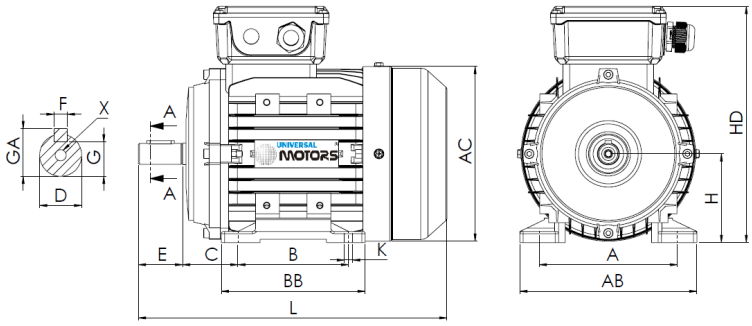


L (standard motor)
220

L (motor w/brake)
292

L (motor w/forced ventilation)
320

L (motor without ventilation)
185

| Feet | | | | | Shaft | | | | | | Carcass | | | | Flange | | | | |
|---|---|---|---|---|---|---|---|---|---|---|---|---|---|---|---|---|---|---|---|
| H | A | B | C | K | D | E | F | G | GA | X | AB | BB | AC | HD | M | N | P | S | T |
| 63 | 100 | 80 | 40 | 7 | 11j6 | 23 | 4 | 8.5 | 12.5 | M4x10 | 120 | 103 | 128 | 175 | - | - | - | - | - |

## Electrical Data

| | | |
|---|---|---|
| Type | HE31/UMHA* 63M1-2 | |
| Poles | 2/3000 | Poles |
| Power | 0.18 | Kw |
| Voltage | 400 | V |
| Frequency | 50 | Hz |
| Speed | 2750 | rpm |
| Nominal current | 0.61 | A |
| Power factor | 0.69 | |
| Efficiency 100% | 60.4 | % |
| Efficiency 75% | 57.6 | % |
| Efficiency 50% | 49.5 | % |
| Torque | 0.63 | N.m |
| Ta/Tn | 2.3 | |
| Ia/In | 4.0 | |
| Tm/Tn | 2.3 | |

## Mechanical Data

| | | |
|---|---|---|
| Shaft height | 63 | |
| Construction form | B3 | |
| Mechanical protection | 55 | |
| Heating class | B | |
| Insulation class | F | |
| Service | S1 | |
| Ambient temp. | -10ºC-40ºC | |
| Altitude | 1000 | |
| Noise | 66 | dB(A) |
| Weight | 3.7 | kg |
| Bearing DE | 6201 2Z C3 | |
| Bearing NDE | 6201 2Z C3 | |

## Extra Data

**Applicable brakes**

| | | | | |
|---|---|---|---|---|
| DC brake | REB-05-06 | Brake torque | 4 | N.m |
| AC brake | AC1 | Brake torque | 4.5 | N.m |

**Applicable forced ventilations**

| | | | |
|---|---|---|---|
| Single-phase forced ventilation | Power | 25 | W |
| Three-phase forced ventilation | Power | 25 | W |