Technical Data Sheet
Electric Motor Three phase in Aluminum IE1

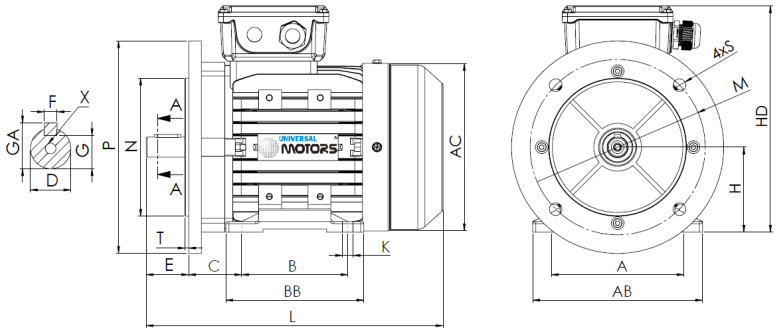

L (standard motor)
278

L (motor w/brake)
345

L (motor w/forced ventilation)
390

L (motor without ventilation)
247

Feet					Shaft						Carcass				Flange				
H	A	B	C	K	D	E	F	G	GA	X	AB	BB	AC	HD	M	N	P	S	T
80	125	100	50	10	19j6	40	6	15.5	21.5	M6x16	160	130	165	217	165	130	200	12	3.5

Electrical Data

Type	BF31/UMA* 80M1-8	
Poles	8/750	Poles
Power	0.18	Kw
Voltage	400	V
Frequency	50	Hz
Speed	700	rpm
Nominal current	0.86	A
Power factor	0.52	
Efficiency 100%	58.0	%
Efficiency 75%	-	%
Efficiency 50%	-	%
Torque	2.46	N.m
Ta/Tn	1.8	
Ia/In	4.5	
Tm/Tn	1.9	

Mechanical Data

Shaft height	80	
Construction form	B35	
Mechanical protection	55	
Heating class	B	
Insulation class	F	
Service	S3-70%	
Ambient temp.	-10ºC-40ºC	
Altitude	1000	
Noise	52	dB(A)
Weight	9.1	kg
Bearing DE	6204 2Z C3	
Bearing NDE	6204 2Z C3	

Extra Data

Applicable brakes

DC brake	REB-05-08	Brake torque	8	N.m
AC brake	AC3	Brake torque	15	N.m

Applicable forced ventilations

Single-phase forced ventilation	Power	45	W
Three-phase forced ventilation	Power	45	W