Technical Data Sheet
Electric Motor Three phase in Aluminum IE3

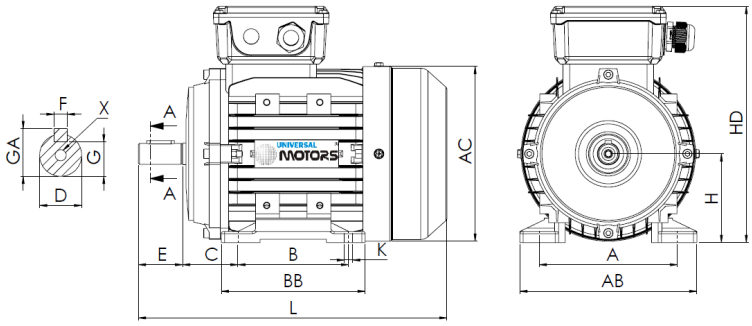

L (standard motor)
477

L (motor w/brake)
570

L (motor w/forced ventilation)
605

L (motor without ventilation)
371

Feet					Shaft						Carcass				Flange				
H	A	B	C	K	D	E	F	G	GA	X	AB	BB	AC	HD	M	N	P	S	T
132	216	178	89	12	38k6	80	10	33	41	M12x28	254	214	265	324	-	-	-	-	-

Electrical Data

Type	PE31/UM3A* 132M-8	
Poles	8/750	Poles
Power	3.00	Kw
Voltage	400	V
Frequency	50	Hz
Speed	730	rpm
Nominal current	7.34	A
Power factor	0.70	
Efficiency 100%	84.2	%
Efficiency 75%	84.8	%
Efficiency 50%	82.9	%
Torque	39.24	N.m
Ta/Tn	2.5	
Ia/In	5.7	
Tm/Tn	2.9	

Mechanical Data

Shaft height	132	
Construction form	B3	
Mechanical protection	55	
Heating class	B	
Insulation class	F	
Service	S1	
Ambient temp.	-10ºC-40ºC	
Altitude	1000	
Noise	73	dB(A)
Weight	53	kg
Bearing DE	6308 2Z C3	
Bearing NDE	6308 2Z C3	

Extra Data

Applicable brakes

DC brake	REB-05-16	Brake torque	80	N.m
AC brake	NA	Brake torque	NA	N.m

Applicable forced ventilations

Single-phase forced ventilation	Power	55	W
Three-phase forced ventilation	Power	55	W