Technical Data Sheet
Electric Motor Three phase in Aluminum IE3

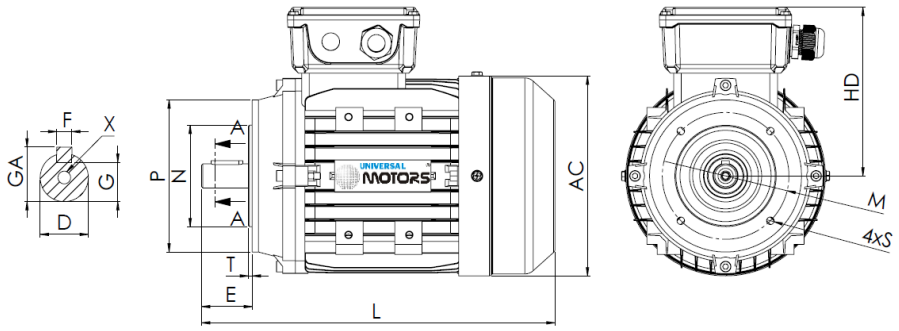

L (standard motor)
390

L (motor w/brake)
490

L (motor w/forced ventilation)
505

L (motor without ventilation)
340

Feet					Shaft						Carcass				Flange				
H	A	B	C	K	D	E	F	G	GA	X	AB	BB	AC	HD	M	N	P	S	T
-	-	-	-	-	28j6	60	8	24	31	M10x22	-	-	230	178	130	110	160	M8	3.5

Electrical Data

Type	PE31/UM3A* 112M-8	
Poles	8/750	Poles
Power	1.50	Kw
Voltage	400	V
Frequency	50	Hz
Speed	710	rpm
Nominal current	3.89	A
Power factor	0.70	
Efficiency 100%	79.7	%
Efficiency 75%	78.9	%
Efficiency 50%	77.2	%
Torque	20.17	N.m
Ta/Tn	2	
Ia/In	4.5	
Tm/Tn	2.4	

Mechanical Data

Shaft height	-	
Construction form	B14	
Mechanical protection	55	
Heating class	B	
Insulation class	F	
Service	S1	
Ambient temp.	-10ºC-40ºC	
Altitude	1000	
Noise	64	dB(A)
Weight	29.5	kg
Bearing DE	6306 2Z C3	
Bearing NDE	6306 2Z C3	

Extra Data

Applicable brakes

DC brake	REB-05-14	Brake torque	60	N.m
AC brake	NA	Brake torque	NA	N.m

Applicable forced ventilations

Single-phase forced ventilation	Power	80	W
Three-phase forced ventilation	Power	80	W