Technical Data Sheet
Electric Motor Three phase in Aluminum IE3

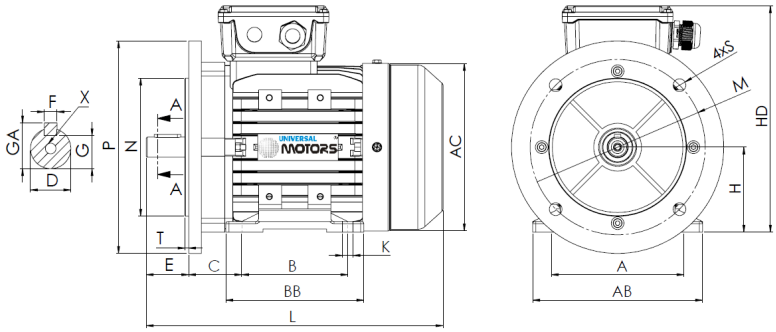


L (standard motor)
384

L (motor w/brake)
460

L (motor w/forced ventilation)
495

L (motor without ventilation)
339

| Feet | | | | | Shaft | | | | | | Carcass | | | | Flange | | | | |
|---|---|---|---|---|---|---|---|---|---|---|---|---|---|---|---|---|---|---|---|
| H | A | B | C | K | D | E | F | G | GA | X | AB | BB | AC | HD | M | N | P | S | T |
| 100 | 160 | 140 | 63 | 12 | 28j6 | 60 | 8 | 24 | 31 | M10x22 | 198 | 176 | 205 | 252 | 215 | 180 | 250 | 15 | 4 |

## Electrical Data

| | | |
|---|---|---|
| Type | PE31/UM3A* 100L2-8 | |
| Poles | 8/750 | Poles |
| Power | 1.10 | Kw |
| Voltage | 400 | V |
| Frequency | 50 | Hz |
| Speed | 715 | rpm |
| Nominal current | 3.13 | A |
| Power factor | 0.65 | |
| Efficiency 100% | 77.7 | % |
| Efficiency 75% | 77.6 | % |
| Efficiency 50% | 74.0 | % |
| Torque | 14.69 | N.m |
| Ta/Tn | 2.2 | |
| Ia/In | 4.6 | |
| Tm/Tn | 2.7 | |

## Mechanical Data

| | | |
|---|---|---|
| Shaft height | 100 | |
| Construction form | B35 | |
| Mechanical protection | 55 | |
| Heating class | B | |
| Insulation class | F | |
| Service | S1 | |
| Ambient temp. | -10ºC-40ºC | |
| Altitude | 1000 | |
| Noise | 62 | dB(A) |
| Weight | 26.5 | kg |
| Bearing DE | 6206 2Z C3 | |
| Bearing NDE | 6206 2Z C3 | |

## Extra Data

**Applicable brakes**

| | | | | |
|---|---|---|---|---|
| DC brake | REB-05-12 | Brake torque | 32 | N.m |
| AC brake | NA | Brake torque | NA | N.m |

**Applicable forced ventilations**

| | | | |
|---|---|---|---|
| Single-phase forced ventilation | Power | 65 | W |
| Three-phase forced ventilation | Power | 65 | W |