Technical Data Sheet
Electric Motor Three phase in Aluminum IE3

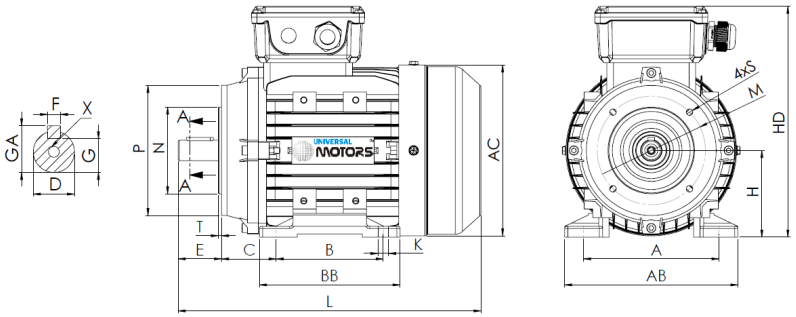

L (standard motor)
384

L (motor w/brake)
460

L (motor w/forced ventilation)
495

L (motor without ventilation)
339

Feet					Shaft						Carcass				Flange				
H	A	B	C	K	D	E	F	G	GA	X	AB	BB	AC	HD	M	N	P	S	T
100	160	140	63	12	28j6	60	8	24	31	M10x22	198	176	205	252	130	110	160	M8	3.5

Electrical Data

Type	PE31/UM3A* 100L2-8	
Poles	8/750	Poles
Power	1.10	Kw
Voltage	400	V
Frequency	50	Hz
Speed	715	rpm
Nominal current	3.13	A
Power factor	0.65	
Efficiency 100%	77.7	%
Efficiency 75%	77.6	%
Efficiency 50%	74.0	%
Torque	14.69	N.m
Ta/Tn	2.2	
Ia/In	4.6	
Tm/Tn	2.7	

Mechanical Data

Shaft height	100	
Construction form	B34	
Mechanical protection	55	
Heating class	B	
Insulation class	F	
Service	S1	
Ambient temp.	-10ºC-40ºC	
Altitude	1000	
Noise	62	dB(A)
Weight	26.5	kg
Bearing DE	6206 2Z C3	
Bearing NDE	6206 2Z C3	

Extra Data

Applicable brakes

DC brake	REB-05-12	Brake torque	32	N.m
AC brake	NA	Brake torque	NA	N.m

Applicable forced ventilations

Single-phase forced ventilation	Power	65	W
Three-phase forced ventilation	Power	65	W